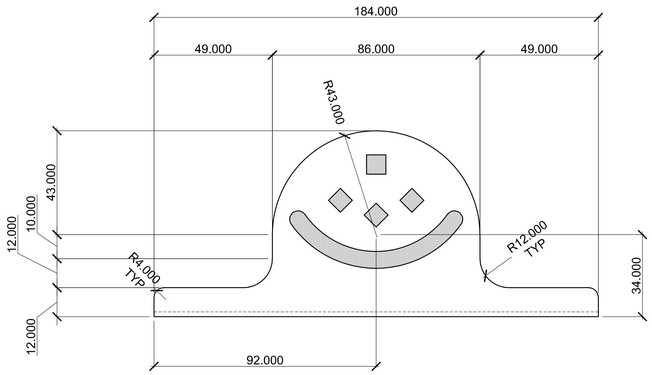

ELEVATION

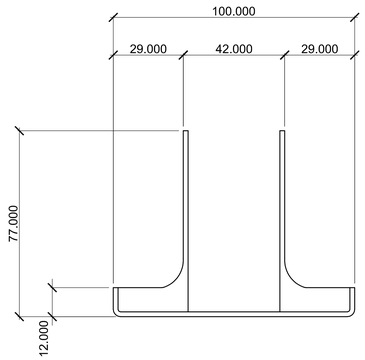

SIDE ELEVATION

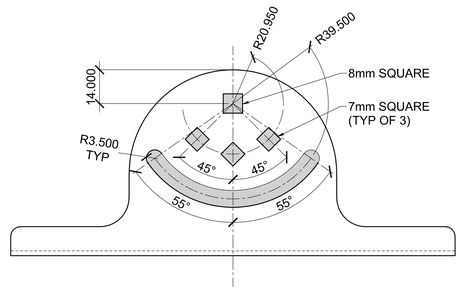

HOLE LOCATION ELEVATION

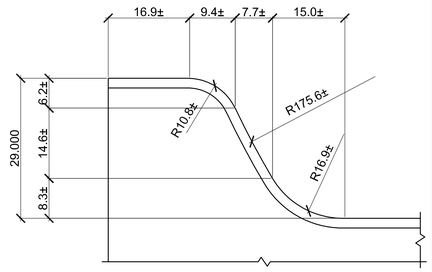

TYPICAL BEND DETAIL

NOTE:

DIMENSIONS NOTED AS (±) INDICATE THAT THE FINAL DIMENSION MAY BE EITHER SLIGHTLY SMALLER OR LARGER DEPENDING ON THE TOOL & DIE USED FOR THE STAMPING PROCESS. ALL OTHER DIMENSIONS NOTED ON THIS SHEET WITHOUT A (±) SHOULD BE STRICTLY ADHERED TO.

NOTE:

ALL MATERIAL SHALL BE AS FOLLOWS:

ANTENNA MOUNT	2mm THICK ALUMINUM
"J" POLE	2mm THICK ALUMINUM

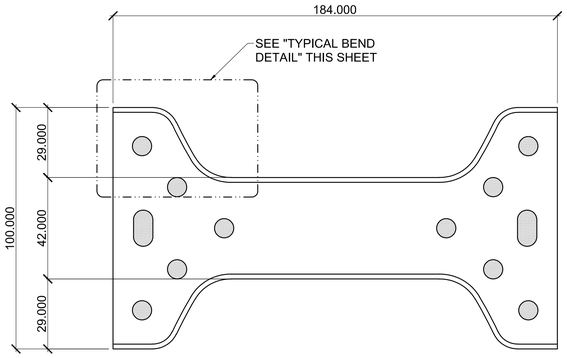

ANTENNA MOUNTING BRACKET - PLAN

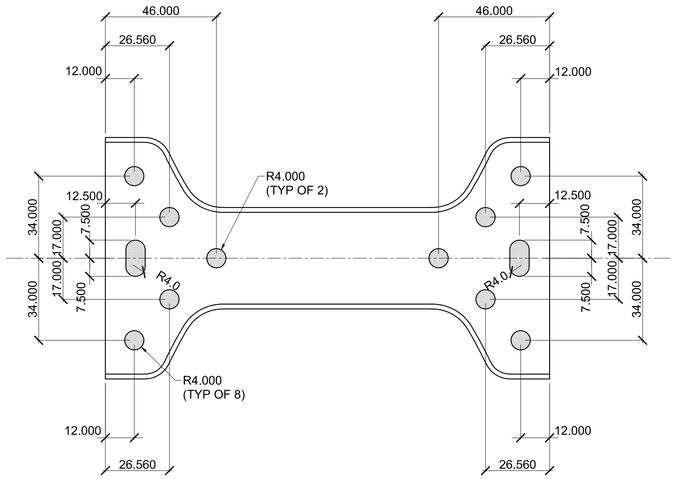

HOLE LOCATION PLAN

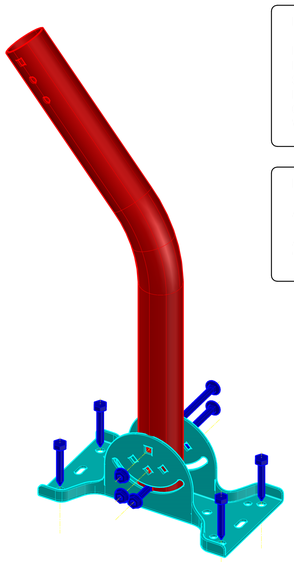

3D VIEW ANTENNA MOUNTING BRACKET & "J" POLE

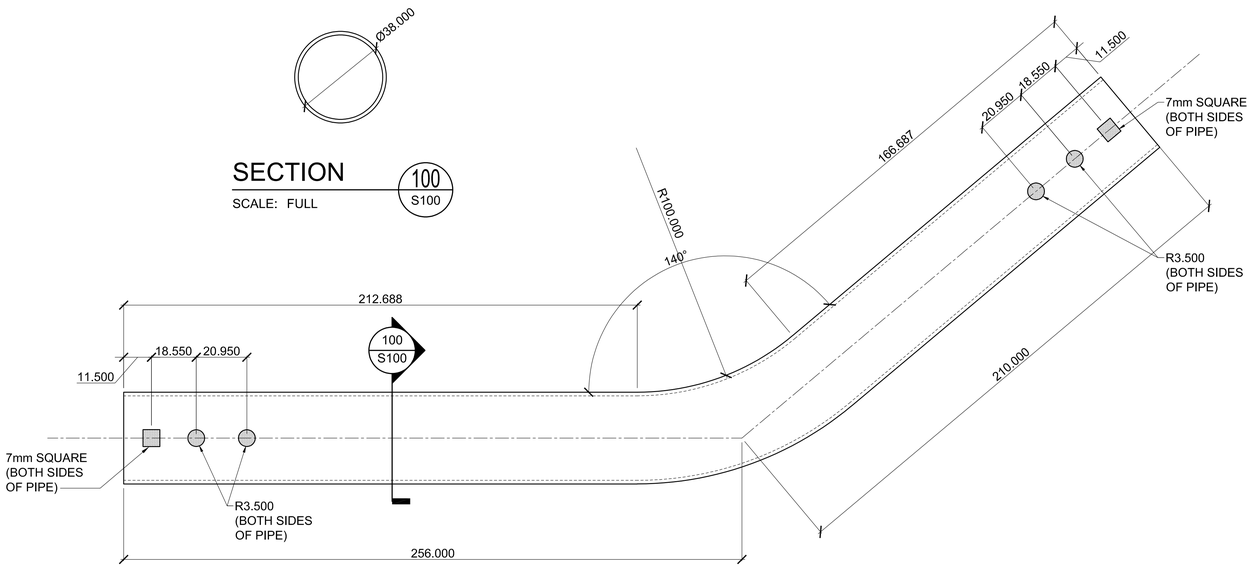

ANTENNA "J" POLE - PLAN

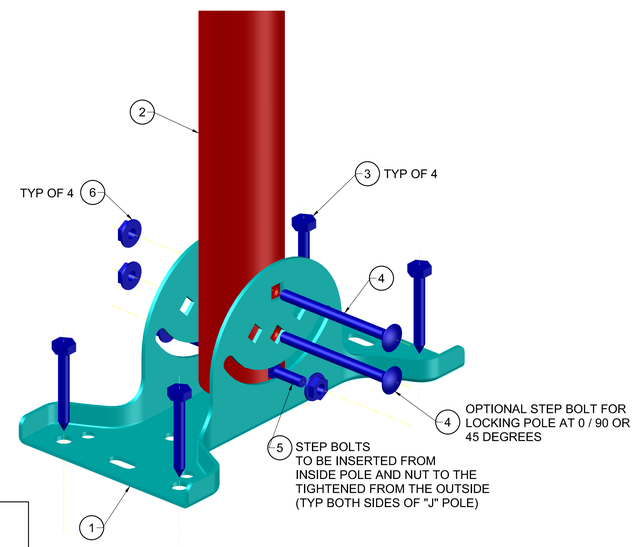

PARTS:

1. (1) MOUNTING BRACKET
2. (1) "J" POLE
3. (4) M8 X 40mm LAG SCREWS
4. (2) M6 X 60mm STEP BOLTS
5. (2) M6 X 20mm STEP BOLTS
6. (4) M6 FLANGE NUTS

3D VIEW CONNECTION OF "J" POLE TO MOUNTING BRACKET

TAYLOR & TAYLOR
CAD SERVICES
309 SUNNYFIELD DR.
GLENSHAW, PA
15116
(412) 486-5033

PROXICAST
312 Sunnyfield Drive
Suite 200
Glenshaw, PA
15116-1936
1-877-777-7694

Revisions

No.	Date	By	Description
.			
.			
.			
.			
.			
.			
.			
.			
.			
.			
.			
.			
.			
.			
.			
.			

Date NOVEMBER 30, 2021

Drawing Name

ANTENNA MOUNTING BRACKET & "J" POLE

Project Number

Drawing Number

S100