ANT-212-003

Coaxial Lightning Arrester 0-6 GHz (N-Male/N-Female)

Applications

Protects Outdoor Antennas for

- 4G/LTE & 5G Modems & Routers
- 2.4 & 5.8 GHz WiFi Access Points
- 900 MHz Radio Systems (e.g. Helium)
- Ham Radio Installations
- Public Safety Band Applications



Product Features

- Reliable Wide-band Performance (DC ~ 6 GHz)
- Bi-Directional Protection
- Bulkhead / Panel / Outdoor Mountable
- Very Low RF Insertion Loss (Signal Attenuation)
- Gas Discharge Tube with Multi-Strike Capability
- High Quality Construction
- N Male – N Female Bulkhead Connectors
- Ground Wire Lug

Ordering Information

Part No.	Description
ANT-212-003	Proxicast Coaxial Lightning Arrester for 0 to 6 GHz (N-Male/N-Female)
NOTE: This part replaces part # ANT-212-002	

General Description

This gas discharge tube lightning suppressor features wide-band operation from DC to 6 GHz with low RF insertion loss, making it ideal for the newer "5G" 802.11ac/ax Wi-Fi and other high-frequency band services such as 3.5 GHz WLL and UNII / ISM applications in the 5.2 - 5.8 GHz bands. It is also a great lightning protector for 3G, 4G/LTE and 5G devices as well as 2.4 GHz Wi-Fi, Ham radio, Helium and other lower frequency applications.

This model features N-Male and N-Female Bulkhead connectors with a rubber O-ring seal for mounting through an enclosure wall or the arrester can be used inline. This protector will pass DC, so it is suitable for applications where DC is carried through the coax cable, such as remote amplifiers and LNAs. Both connector ports are equally protected - it can be installed in either orientation. A ground lug on the housing provides superior grounding.

Coaxial lightning suppressors should be installed between outdoor antennas and radio equipment to protect equipment, structures and personnel from high-energy electrical pulses carried through the coax cable either from a direct or nearby lightning strike. Arresters should be installed as close a possible to the equipment to be protected, often at the point where the coax cable enters the building. They can also be installed near the antenna for additional protection.

Consult your local building, fire, safety, or insurance codes for proper lightning protection system design for your application.

All outdoor coax connections should be weather-proofed to minimize damage caused by moisture in the connectors or cabling. Use our Self-Bonding silicone tape (ANT-900-002) for fast and easy connection sealing.

© Copyright Proxicast, LLC. All rights reserved.

ANT-212-003

Coaxial Lightning Arrester 0-6 GHz (N-Male/N-Female)

Electrical Specifications

Parameter	Rating
Frequency Range	0 to 6 GHz
Discharge Voltage	DC 230V
Max Discharge Current	10 kA (8/20 µs)
Insertion Loss	< 0.2 dB
VSWR	< 1.2
Impedance	50 Ohm
Max Input Power	200 W

Mechanical Specifications

Parameter	Rating
Connector Types	N Male & N Female Bulkhead Jack
Ground Lug	8-5M Non-Insulated Ring Terminal Lug (#6 AWG Max Wire Diameter) 5mm M4 Stainless Steel Screw (0.7mm Course Pitch)
Materials (RoHS Compliant)	Body: Nickel Plated Brass Signal Pins: Gold Plated Bronze
Dimensions	2.7 x 1.22 in (68.2 x 31 mm)
Weight	4.4 oz (125 g)
Operating Temperature	-40°C to +85°C

Operation of this device outside the parameter ranges given above may cause permanent damage.

© Copyright Proxicast, LLC. All rights reserved.

Mechanical Dimensions

Dimensions in millimeters

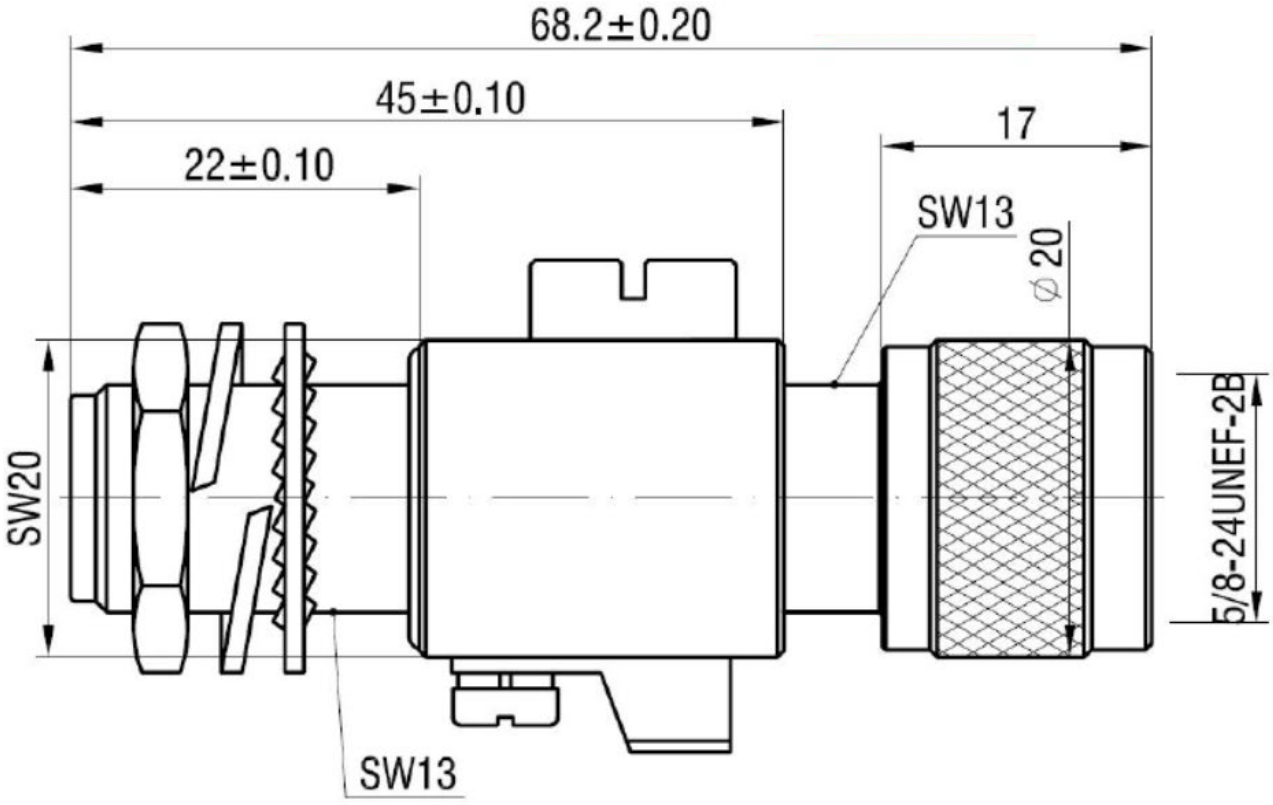

RECOMMENDED
MOUNTING DIMENSIONS

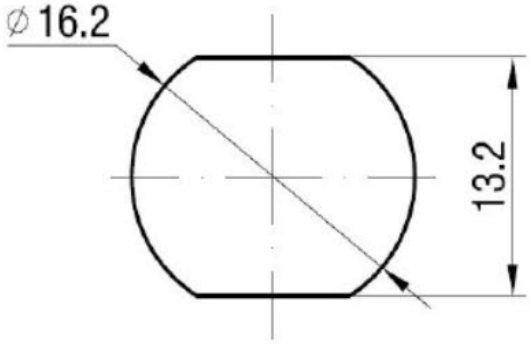

© Copyright Proxicast, LLC. All rights reserved.

Contact Information

For the latest specifications, additional product information, worldwide sales and information about Proxicast:

Web: www.proxicast.com **Tel:** **1-877-777-7694**

Email: sales@proxicast.com **1-412-213-2477**

Proxicast • 312 Sunnyfield Drive, Suite 200 • Glenshaw, PA 15116 USA

For technical questions and application information:

Email: support@proxicast.com

Important Notice

The information contained herein is believed to be reliable. Proxicast makes no warranties regarding the information contained herein. Proxicast assumes no responsibility or liability whatsoever for any of the information contained herein. Proxicast assumes no responsibility or liability whatsoever for the use of the information contained herein. The information contained herein is provided "AS IS, WHERE IS" and with all faults, and the entire risk associated with such information is entirely with the user. All information contained herein is subject to change without notice.

The information contained herein or any use of such information does not grant, explicitly or implicitly, to any party any patent rights, licenses, or any other intellectual property rights, whether with regard to such information itself or anything described by such information. Proxicast products are not warranted or authorized for use as critical components in medical, life-saving, or life-sustaining applications, or other applications where a failure would reasonably be expected to cause severe personal injury or death.

© Copyright Proxicast, LLC. All rights reserved.